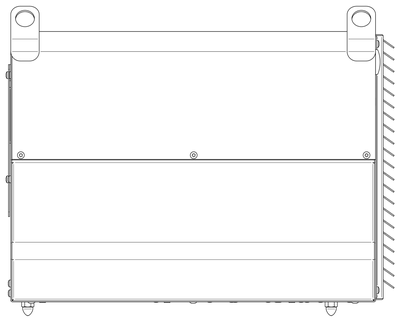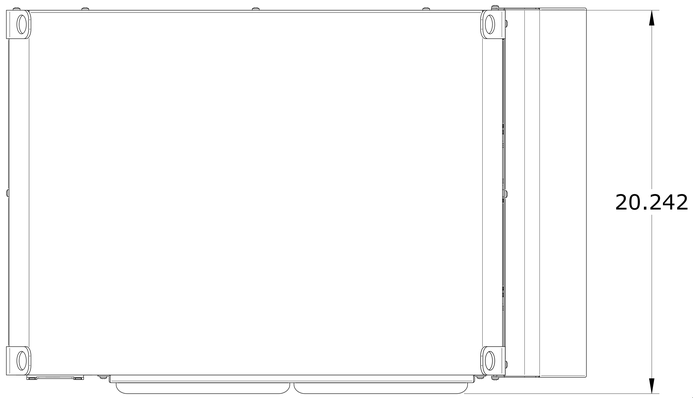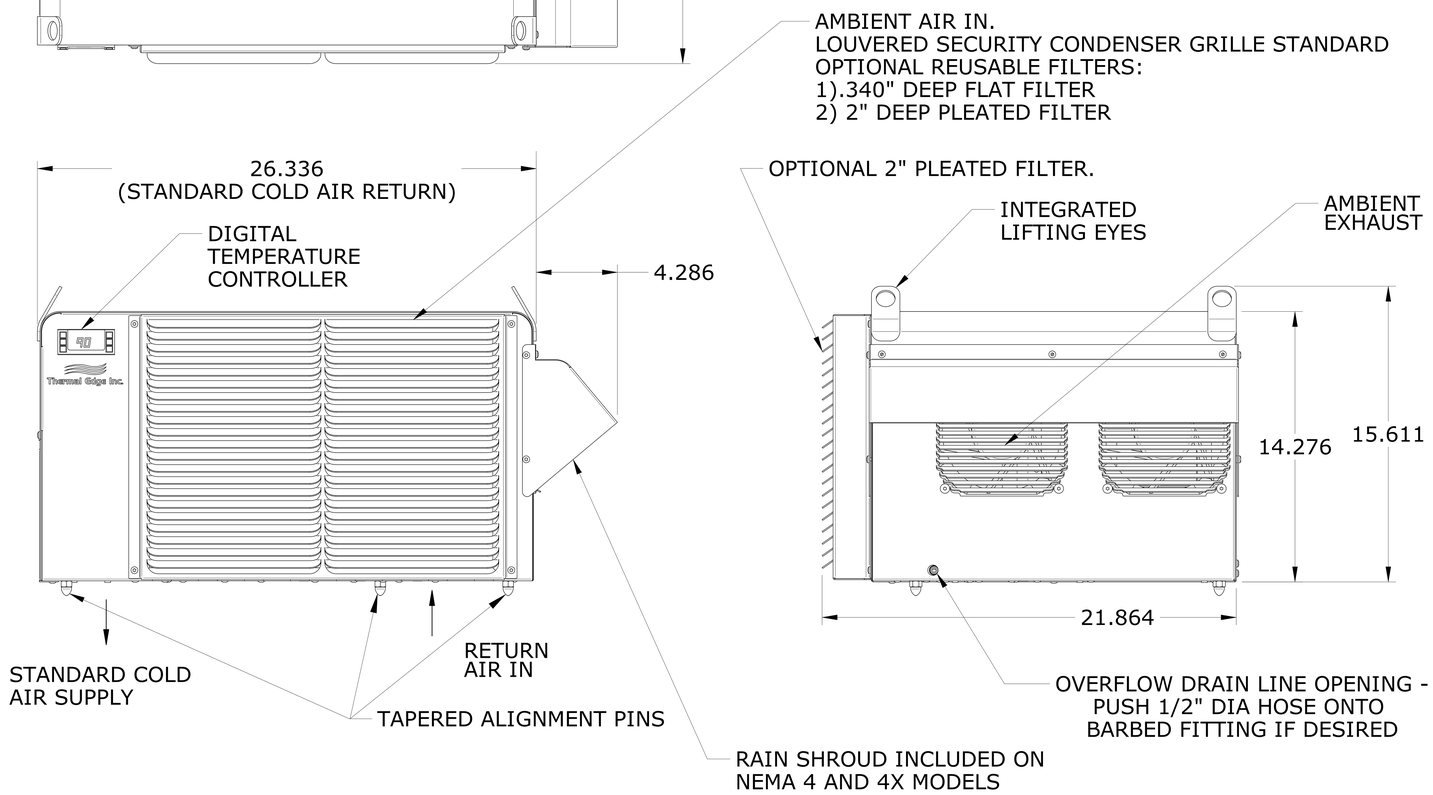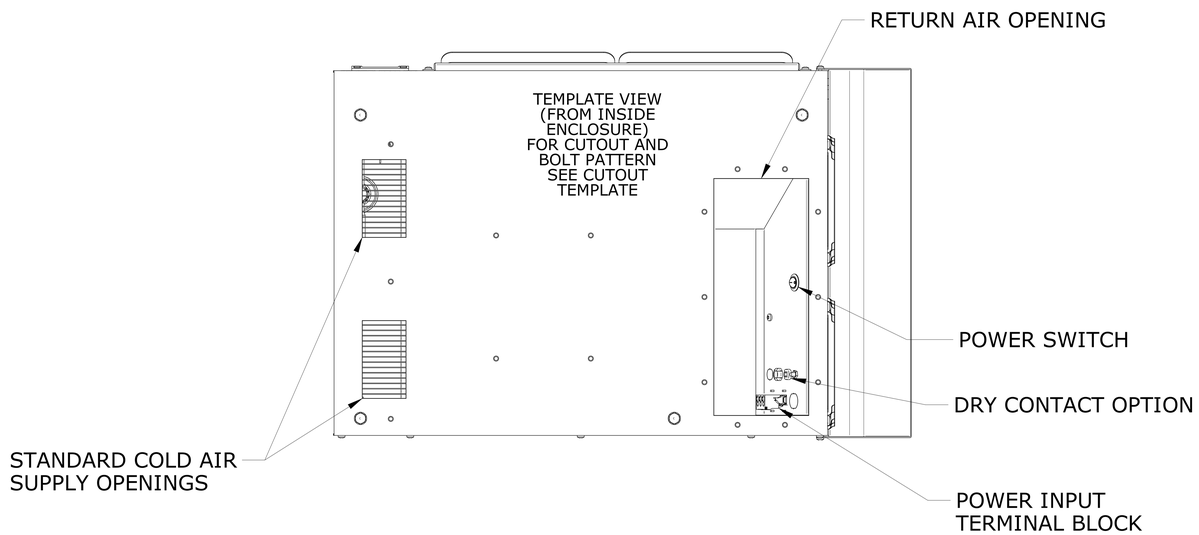TOP MOUNT TM061 (6,000 BTU/H) AND TM081 (8,000 BTU/H) 120V, 230V, AND 480V MODELS